HANDORF®
Concept _ Innovate _ Integrate

Full Extension Under Mount Slide with Locking Device

PRODUCT

DESCRIPTION

- Load Capacity: 35kg
- Finish: Zinc Plated
- Full extension
- Tool free assembly and removal of drawer without noise
- Drawer up&down adjustment: 0~+3mm
- Maximum drawer side thickness: 16mm

ASSEMBLY

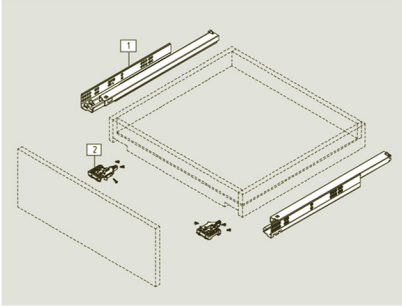

Installation Dimensions(mm)

NL=Nominal Slide Length LT=Internal Cabinet Depth LT=NL+3

Standard drawer

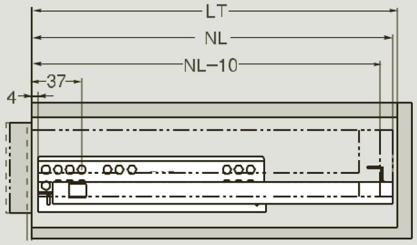

NL=Nominal Slide Length LT=Internal Cabinet Depth LT=NL+21

Inner drawer

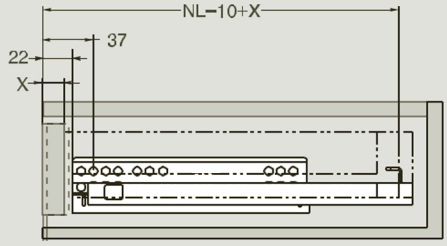

Screw Positions of the Slides(mm)

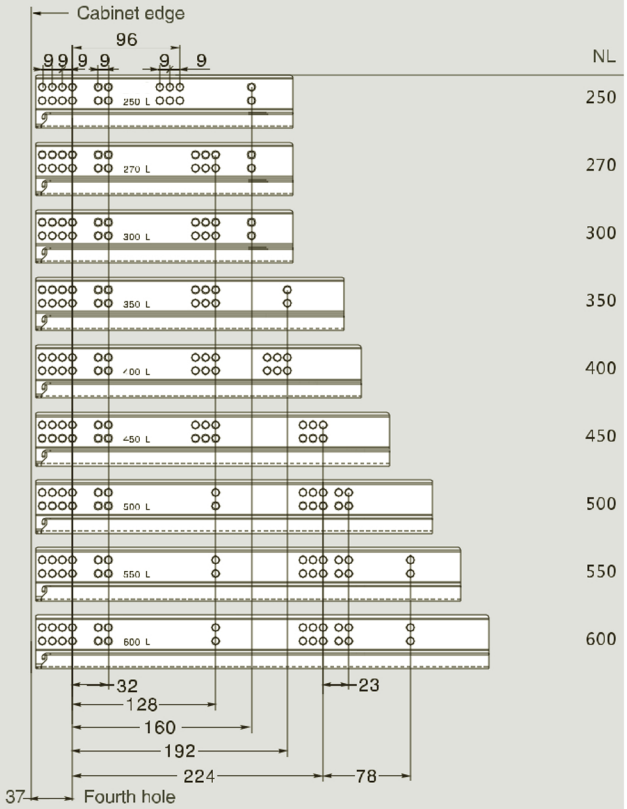

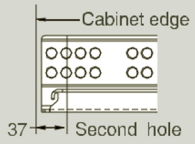

Fixing hole position for inner drawer

Installation Dimensions(mm)

SKW=Internal Drawer Width
LW=Internal Cabinet Width

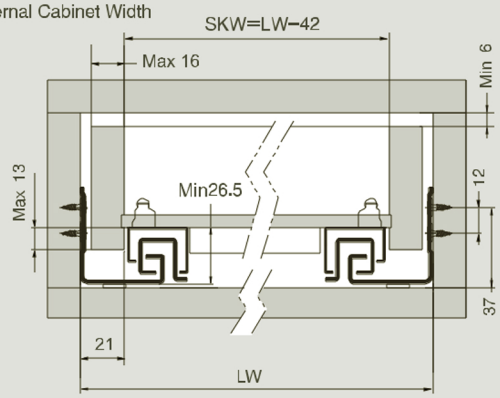

Drawer Back Preparation(mm)

Soft close drawer

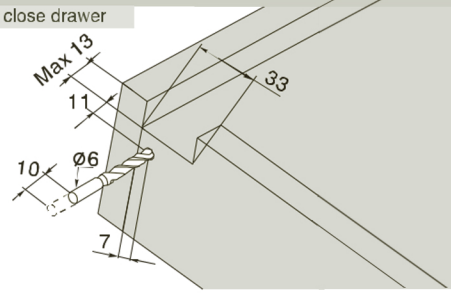
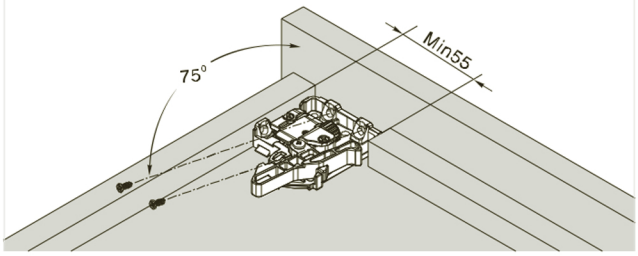
Locking Device Installation(mm)